Detail Proposal Form - Ideate Stage of Quarter Finals

i. **Team Name**
ASHKARA

ii. **Name of Team Leader***
MHASAWADE PRATIK UTTAM

iii. **Email ID of team lead***
pratik.mhasawade.entc.2023@vpkbiet.org

iv. **Contact Number***
+91 9699436141

v. **Address for Correspondence***
VPKBIET, Vidya Nagari, Baramti, Dist. Pune, Maharashtra - 413133

vi. **Name of Institute***
Vidya Pratishthan's Kamalnayan Bajaj Institute of Engineering and Technology

vii. **Address of Institute***
Vidya Nagari, Baramti, Dist. Pune, Maharashtra - 413133

viii. **Team Member Details***

Name of Team Members	Email Id	Contact Number	Branch
Mhasawade Pratik Uttam	pratik.mhasawade.entc.2023@vpkbiet.org	9699436141	E&TC
Saste Aniket Appaso	aniket.saste.entc.2023@vpkbiet.org	9356927785	E&TC
Dhamal Niraj Anil	niraj.dhamal.entc.2023@vpkbiet.org	7972488356	E&TC
Tiwari Abhishek Prakash	abhishek.tiwari.entc.2023@vpkbiet.org	9420397259	E&TC
Shinde Gaurav Arun	gaurav.shinde.2023@vpkbiet.org	9373150132	E&TC

ix. Mentor Details:

Name of Mentor	Email ID	Contact Number	Designation	Department Name
Dr. Rajveer Shastri	rajveer.shastri@vpkbiet.org	9975393409	Professor	E&TC

Section-I: Hardware Resource Section

1. Name of Processor*

Yamuna (SHAKTI)

Section-II: Technical Aspects of Innovative Solution

1. Proposal Title

AI-Powered Drone System for Early Detection of Stampede and Crowd Panic Events – using SHAKTI Dual-Core Yamuna RISC-V SoC

2. Proposal Summary

India has witnessed multiple stampede-related tragedies due to lack of proactive surveillance, particularly at large-scale religious or political events. We propose the development of an **AI-powered Surveillance Drone** built on India's open-source **SHAKTI Yamuna SoC**, implementing on the **Arty A7-100T FPGA board**, to address the urgent need for **indigenous, real-time, secure aerial monitoring systems** in smart city, crowded areas, law enforcement, and disaster management applications.

This drone will be capable of **autonomous flight, onboard edge AI processing**, and real-time telemetry, enabling it to **detect crowd density anomalies, object movement, and potential threats without cloud dependency**. By leveraging an **FPGA-based reconfigurable flight controller** and integrating a **RISC-V architecture**, our system will provide flexibility, data privacy, high reliability and real-time control in mission-critical environments.

Our innovation addresses the limitations of existing imported drones by offering:

1. **Built on India's indigenous SHAKTI RISC-V SoC,** our drone reduces reliance on foreign hardware and aligns with the national DIR-V initiative.

2. **Performs real-time AI inference onboard,** eliminating internet dependency and enabling instant response even in remote or crowded areas.

3. **Ensures data privacy and national security** through fast response, low latency, and local analytics.

4. **Offers a mission-specific design for stampede detection,** unlike generic imported drones not optimized for public safety in mass gatherings.

5. **Provides a cost-effective, open, and customizable platform,** empowering scalable deployment for strategic, civic, and defense needs.

3. Please provide a concept note explaining the technology/ technical & other necessary details

1. Introduction

Stampede events in large gatherings such as religious festivals, concerts, and public rallies have historically resulted in tragic casualties. In response to this pressing societal challenge, our team proposes an indigenous, RISC-V-based drone system capable of detecting such events in real-time using edge AI. This autonomous surveillance platform performs local video processing and crowd behavior inference directly on a field-programmable SoC without cloud dependency, enhancing public safety and strategic responsiveness.

2. Technology Stack

Processor:

- **SHAKTI Dual-Core Yamuna SoC** synthesized on the **Arty A7-100T FPGA**
- 32-bit **RV32IMAC** core configuration
- Dual-core support: one core for real-time control (core 0), the other for AI inference (core1)

Platform:

- **Arty A7-100T FPGA** with onboard peripherals, PMODs, and enough logic resources for SoC + application logic

Operating Environment:

- **Core 0:** Runs **FreeRTOS** for sensor interfacing, control logic, and LoRa communication
- **Core 1:** Runs **bare-metal CNN inference** using quantized model arrays stored in memory

Sensors and Modules:

- **IMU (MPU6050):** For orientation feedback
- **GPS:** For location tracking
- **PWM Outputs:** For ESC/motor control
- **Camera (OV7670 or equivalent):** For live video input to Core 1
- **LoRa Module:** For long-range, low-power alert communication

3. System Architecture

Functional Separation:

- **Core 0:** Controls flight via PID algorithm, handles GPS/IMU data, and manages alerts
- **Core 1:** Receives grayscale video frames, processes them with lightweight CNN, and signals panic events

Inter-core Communication:

- Shared memory regions and flag variables are used for signaling between cores
- Optional interrupts may be added for time-critical coordination

Peripheral Integration:

- All sensors and actuators are mapped using memory-mapped I/O via AXI interconnect crossbar
- Camera input captured through GPIO interface or parallel input, then buffered in RAM for inference

4. AI and Model Execution

The panic detection AI model is:

- A custom-trained lightweight **Convolutional Neural Network (CNN)**
- Quantized to **8-bit** fixed-point weights to minimize memory and computation
- Operates on low-resolution (e.g., 64x64 grayscale) video frames for efficient inference

Inference steps:

1. Frame capture from camera
2. Preprocessing (grayscale, resize, normalize)
3. CNN inference
4. If panic behavior detected → flag Core 0 → send LoRa alert

The model is compiled into standard format and executed using manual forward-pass logic in C on Core 1.

5. Hardware Design Flow

- SoC Design in **Vivado** using SHAKTI RTL and IP Integrator
- Peripheral interconnects (UART, PWM, I2C, Camera GPIO) mapped via AXI
- Toolchain: SHAKTI SDK for firmware, Vivado for synthesis, simulation, and bitstream
- Separate C projects for Core 0 (RTOS) and Core 1 (Bare-metal AI)

6. Drone Control System

Flight Control (Core 0):

- PID controller computes adjustments based on IMU feedback
- PWM signals sent to ESCs for motor control
- LoRa alerts triggered upon panic flag

Sensor Fusion:

- IMU and GPS fused using complementary filter
- Real-time decision-making loop ~100 Hz

RTOS Tasks:

- IMU Task, GPS Task, PID Task, PWM Task, Communication Task

7. Software Flow

Core 0 (RTOS Based):

- Initialization → Sensor Tasks → PID Loop → ESC PWM Output → Panic Flag Monitor → LoRa Alert

Core 1 (AI Inference Loop):

- Initialize Camera → Capture Frame → Preprocess → CNN Forward Pass → Panic Score → Flag Core 0

8. Optimization Strategy

- **Quantized model** reduces resource usage
- **Frame rate throttling** (10–15 fps) reduces compute load
- Use of **shared memory buffers** avoids data copying
- Task scheduling tuned for **real-time guarantees** on both cores

9. System Validation Plan

- Functional testing of each core independently (sensor read, PWM, AI logic)
- Simulation of camera input via static image datasets
- Integration testing: inter-core coordination, LoRa messaging
- Field testing: simulate crowd movement, confirm AI response time < 100 ms

10. Future Scalability

- Migrate system to ASIC or SoM platform post-competition
- Add object tracking and YOLO-tiny models using CNN accelerator blocks

- Enable swarm coordination for area-wide monitoring
- Integrate drone-to-drone communication for collaborative detection

11. Societal and Strategic Value

- Prevents stampede-related disasters in high-density events (e.g., Upcoming Kumbh Mela 2027, protests, sport events)
- Reduces response time through edge inference
- Supports Make-in-India, DIR-V, and Atmanirbhar Bharat missions
- Can be adapted for military, border patrol, and natural disaster zones

12. Conclusion

This project delivers a real-time, autonomous, edge-AI-powered drone solution that is both practical and scalable. It leverages India's indigenous SHAKTI RISC-V SoC and FPGA capabilities to address a critical public safety challenge with cutting-edge technology. The system is designed to be deployable, modular, and upgradeable, with clear value in both commercial and strategic domains.

4. Briefly state the Objectives and Proposed Approach

The primary objective of this project is to develop an **indigenous, real-time, AI-enabled drone system** capable of detecting **stampede and panic events in large crowds**. Leveraging the **SHAKTI Dual-Core Yamuna RISC-V SoC** on the **Arty A7-100T FPGA platform**, the system ensures **onboard intelligence**, low-latency decision-making, and full **reconfigurability**—eliminating the need for cloud infrastructure or foreign proprietary processors.

1). Strategy and/or Methodology of Work:

Our project follows a modular and resource-optimized development strategy built around three progressive phases:

Phase 1: MVP (Minimum Viable Product)

- Synthesize and verify SHAKTI Yamuna Dual-Core SoC on Arty A7-100T.
- Validate Core 0 running FreeRTOS for sensor interfacing and PWM control.
- Validate Core 1 executing a dummy CNN loop on static input frames.
- Integrate LoRa/UART communication and test inter-core signaling.

Phase 2: Proof of Concept (POC)

- Integrate OV7670 camera for live frame capture.
- Deploy quantized lightweight CNN model on Core 1 for panic detection.
- Demonstrate real-time communication between Core 1 and Core 0 using shared memory.
- Simulate full drone logic on test bench.

Phase 3: Final Hardware Prototype

- Mount drone frame with all hardware modules: camera, GPS, LoRa, ESCs, IMU.
- Execute real-time flight control via Core 0 (PID algorithm).
- Run edge AI inference on Core 1.
- Transmit alerts via LoRa upon detection.

Post-competition, the design can scale to include object detection, swarm coordination, and multi-drone deployments.

2). Block Diagram and Subsystem Details

System Overview Block Diagram:

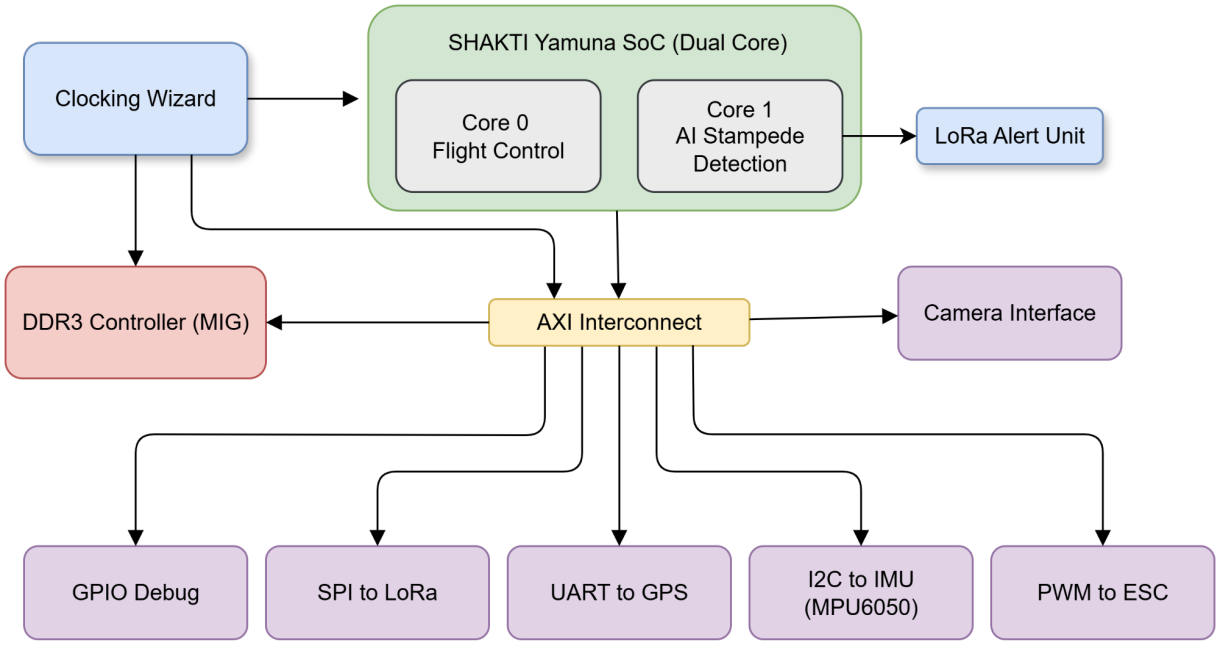

Block Descriptions:

- **Core 0 (Flight Control):** Runs FreeRTOS, handles IMU & GPS input, computes PID, controls PWM signals for ESCs.

- **Core 1 (Stampede Detection):** Runs quantized CNN on preprocessed grayscale frames for panic behavior classification.
- **Camera Interface:** Captures 320×240 grayscale frames via GPIO/parallel input to Core1
- **DDR3 Memory:** Stores frame buffers and model weights; accessed by both cores via AXI.
- **LoRa Transmitter:** Sends low-latency alerts to external receiver on detection.
- **ESCs, IMU, GPS:** Connected to Core 0 for flight control using I2C/UART and PWM.

3). Scope and Boundaries

Scope:

- End-to-end development of a real-time embedded AI drone using RISC-V SoC.
- Demonstrate detection of stampede events in lab or outdoor simulations.
- Onboard inference and control, with LoRa-based remote alerting.

Boundaries:

- Large CNN models like YOLOv4 are outside initial resource scope.
- Physical drone flight during semifinals may be simulated on bench.
- High-definition video processing will be considered only in future FPGA upgrades.
- Facial recognition or identity tracking is not included.

4). Unique Selling Proposition (USP)

- **Indigenous and Open-Source:** Built on India's own SHAKTI RISC-V architecture, reducing foreign dependency.
- **True Edge AI System:** Performs real-time decision-making onboard, without cloud or server involvement.
- **Dual-Core Real-Time + AI Design:** Parallel flight control and AI tasks optimized within the same SoC.
- **Modular, Scalable Architecture:** Easily extensible to surveillance, military, or disaster response scenarios.
- **Targeted for Strategic Deployment:** Direct relevance to public safety, events like Kumbh Mela, Large gatherings, etc.
- **Low cost solution** : Due to use of Open source technologies, it reduces the cost to a large extent as compared to the existing similar solutions.

This innovative solution aims to deliver safety, sovereignty, and scalability in one unified platform.

5. Has any preliminary work been carried out?

Our team has initiated a thorough literature survey and system feasibility analysis for implementing an AI-powered stampede detection system on a SHAKTI Yamuna SoC-based

drone platform. We have studied crowd behavior modeling techniques using AI, optimized CNN architectures for embedded systems, and FPGA-based hardware acceleration strategies.

In parallel, we have prior hands-on experience in building and flying drones using commercial drone kits, including ESC configuration, PID tuning, IMU-GPS integration, and ground control communication. This foundational knowledge forms a strong base for transitioning into custom SoC-based drone system development.

We have also begun early architectural planning for integrating the SHAKTI Yamuna Dual-Core SoC onto the Arty A7-100T FPGA platform and explored Vivado IP integration for camera, sensor, and control peripherals.

6. Milestones

Semifinal Stage Goals (MVP):

- Complete literature review and finalize AI model selection for stampede detection
- Synthesize dual-core Yamuna SoC on Arty A7-100T FPGA
- Validate basic peripheral IPs (PWM, UART, I2C, GPIO)
- Implement FreeRTOS on Core 0 with dummy PID loop
- Begin camera interfacing and dummy CNN execution on Core 1
- Test inter-core communication and LoRa alert simulation

Final Stage Goals (POC + Prototype):

- Fully assemble drone with onboard sensors, camera, and SHAKTI SoC
- Implement real-time video capture and CNN inference on Core 1
- Tune PID controller and enable full flight control from Core 0
- Integrate LoRa-based alerting system and complete end-to-end demo
- Conduct validation through test flights and simulated crowd scenarios

7. Intellectual Property

Our system currently does not incorporate any proprietary intellectual property owned by the team, and no patent has been filed yet. The core ideas and software algorithms are original developments of our group. All third-party technologies used (such as networking protocols and open-source libraries) are under appropriate licenses. After the system is fully developed and

tested, we plan to evaluate patenting our key innovations, such as the specific crowd-prediction algorithm and adaptive control logic. We will ensure no existing patents are infringed and will secure rights for any novel methods. Since our focus is public safety, we also intend to publish basic design information openly while protecting unique competitive elements. At present, there are no patent numbers or assignees to report.

8. Relevant References.

No.	Title	Publication/Source	Link
1	On-Device Federated Continual Learning on RISC-V-based Ultra-Low-Power SoC for Intelligent Nano-Drone Swarms	arXiv	https://arxiv.org/abs/2503.17436
2	Intelligent Security Monitoring System Based on RISC-V SoC	MDPI (Electronics)	https://www.mdpi.com/2079-9292/10/11/1366
3	FPGA-based Platform for Intelligent Real-time Autonomous Drone Operations	SDU Research Portal	https://portal.findresearcher.sdu.dk/files/196981640/2MPDrone_CR.pdf
4	FitNN: A Low-resource FPGA-based CNN Accelerator for Drones	ResearchGate (IEEE IoTJ)	https://www.researchgate.net/publication/360955478_FitNN_A_Low-resource_FPGA-based_CNN_Accelerator_for_Drones
5	A Surveillance with a Geographic Information System to count crowd in real-time using a Deep Convolution Neural Network with Drone Technology	Atlantis Press	https://www.atlantis-press.com/article/126009172.pdf
6	**Stampede detector** based on deep learning models using dense optical flow	sciencedirect	https://doi.org/10.1016/j.engappai.2024.109940

Section-III: Business Aspects of Innovative Solution

1. Novelty

Our proposed solution is a novel, fully indigenous real-time surveillance drone platform built on the SHAKTI Yamuna SoC (India's open-source RISC-V processor) implemented on the Arty A7-100T FPGA board. Unlike conventional drones that depend on closed-source flight controllers and external cloud systems, our system integrates edge AI, FPGA-based sensor processing, and flexible mission reconfiguration — offering a secure, modular, and cost-effective alternative for critical surveillance applications.

The key innovation lies in combining FPGA-level determinism and parallelism with RISC-V-based open computing, AI-based behavior detection (e.g., crowd anomalies, intrusion detection), and autonomous decision-making — all on the edge.

Innovative Aspects:

- First aerial surveillance platform based on SHAKTI RISC-V SoC + FPGA
- Fully reprogrammable flight controller allowing tailored missions (border patrol, event monitoring, disaster response)
- Edge-computing capable — performs vision and sensor processing onboard, reducing dependency on connectivity
- Designed for Smart City & Homeland Security sectors — with custom I/O (I2C, SPI, PWM, UART) for rapid integration of cameras, IR sensors, gas detectors, etc.
- Open-source, trusted, and scalable — ideal for deployment in sensitive government and defense applications

2. Opportunity

In today's rapidly urbanizing world, ensuring **public safety and real-time situational awareness** during large gatherings, festivals, public protests, political rallies, and border surveillance has become a top priority for governments and smart city planners. Traditional manual surveillance methods are inefficient, reactive, and heavily dependent on human interpretation. Meanwhile, most drone-based solutions in the Indian market are **imported, expensive, and lack on-edge intelligence or indigenous trust**.

There is a pressing need for a **low-cost, autonomous, real-time surveillance drone platform** that is **customizable, secure, and built in India**. Our proposed solution addresses this by delivering a fully programmable drone using the **SHAKTI RISC-V SoC** on **FPGA**, integrated with a camera and edge AI ideal for real-time surveillance and early warning.

From a societal perspective, this innovation offers the potential to save lives by enabling early intervention during crowd panic events. Strategically, it supports India's vision for self-reliant, indigenous technology under the DIR-V and Atmanirbhar Bharat initiatives.

Commercially, the platform has applications beyond crowd safety, including:

- Disaster response and emergency evacuation monitoring
- Public event surveillance (concerts, protests, pilgrimages)
- Perimeter security in defense, airports, and borders
- Smart city infrastructure for automated threat detection

3. Market Feasibility

Addressable Market

India's increasing urbanization, public gathering density, national security needs, and Smart City initiatives have created a high demand for **real-time surveillance drones** that are cost-effective, secure, and locally manufacturable.

- **India's Drone Market Size (2025 projection):** ₹12,000–15,000 Cr
- **Surveillance drone segment share:** 25–30%
- **Addressable Market (India, Surveillance):** ₹3,500–4,500 Cr
- **Key Verticals:**
    - Law Enforcement (State police, NDRF, CRPF)
    - Smart Cities (municipal surveillance infrastructure)
    - Event Management (religious festivals, stadiums)
    - Border Security Forces (BSF, ITBP, SSB)
    - Railways/Transport Zones (stations, terminals)

Target Market

The primary target market for this AI-powered surveillance drone system includes government and public sector agencies involved in maintaining law and order, managing large-scale public events, and protecting sensitive infrastructure. This includes state police departments, paramilitary forces like CRPF and BSF, and disaster response units such as the NDRF and SDRF. Additionally, smart city missions across over 100 Indian cities require advanced, real-time surveillance systems, making municipal and urban development bodies a key audience.

Railways, airports, and public transport hubs are also potential adopters, as they need crowd monitoring in real time to prevent congestion, unauthorized access, or security threats. Event organizers — especially for religious gatherings like Kumbh Mela, Ganesh Visarjan, or political rallies — are another high-potential market, needing rapid deployment, aerial monitoring, and AI-based alerting capabilities.

Competitive Landscape:

Current market players include:

- DJI (international, hardware-focused, limited on edge AI)
- Zen Technologies (Indian, focused on defense and training systems)
- AI-based CCTV systems (non-mobile, cloud-dependent)
- R&D efforts at academic institutions (prototypes, no commercialization)

Our solution differentiates itself by offering:

- **Fully indigenous RISC-V hardware (SHAKTI)**
- **Onboard AI inference with no cloud dependency**
- **Modular FPGA-based design for upgradability**
- **Targeted use-case for panic detection at high-density gatherings**

Market Entry Strategy:

- Initial pilot deployment at **Kumbh Mela 2026-27** in partnership with local authorities
- Collaboration with **state police and disaster management teams** for proof-of-concept
- Post-pilot, scale via partnerships with **Smart City projects and public event organizers**

This strategy ensures early adoption, visibility, and validation, enabling us to demonstrate societal impact and commercial viability in parallel.

Competitor Landscape

Indian companies such as ideaForge and Garuda Aerospace provide locally manufactured drones, yet they often rely on imported cores (ARM-based SoCs) and lack deep customization or modularity at the firmware level. Furthermore, these solutions are relatively expensive and not open for academic, research, or institutional adaptation.

In contrast, your solution, based on the SHAKTI Yamuna SoC implemented on the Arty A7-100T FPGA, stands out for being entirely indigenous, open-source, and modular. It offers AI-enabled edge analytics, lower cost (₹1.5–2 lakh/unit), and customizable Verilog-based firmware and SoC logic. This flexibility, combined with India-made processor architecture, gives your system a significant competitive edge in sectors demanding trust, affordability, and real-time intelligence — especially for defense, disaster response, and public safety missions.

4. Commercialization Roadmap

1) Market Entry Strategy & Roadmap for Scalability

Vision: From Innovation to Real-World Impact

The primary objective of this project is to **translate indigenous, edge-AI drone technology into a deployable public safety product** for government, institutional, and commercial use. The platform's open-source RISC-V base, modular design, and focus on real-time crowd behavior detection provide a unique opportunity to scale this innovation from a functional prototype to a **mass-deployable product**.

We envision a **multi-phase commercialization journey** starting from sponsored research validation, followed by targeted pilot deployments, and culminating in venture-backed manufacturing, SaaS platform development, and national/international deployment.

Key Next Steps Toward Commercialization

- **Sponsored research support** and mentoring from public agencies (e.g., MeitY, DST, disaster management units)
- **Proof-of-concept validation in real-world settings** (e.g., upcoming Kumbh Mela)
- **IP protection and licensing partnerships** with drone manufacturers and smart city integrators
- **Venture financing** and strategic partnerships with drone-tech startups for manufacturing and marketing

Phase 1: Prototype & Validation (0–2 Months)

Timeline: Mid-July to Mid-September 2025

- Finalize drone hardware architecture using SHAKTI Yamuna SoC on FPGA
- Integrate sensors (IMU6050, GPS), AI camera, and flight control modules
- Demonstrate real-time edge AI capabilities: object tracking, crowd density detection
- Simulate and test FPGA logic using Vivado + SHAKTI toolchain
- Initiate sponsored research outreach to DRDO, MeitY, DST, and state police departments

Phase 2: MVP Deployment & Licensing (2–4 Months)

Timeline: Mid-September to Mid-November 2025

- Deploy MVP drones in 2–3 field trials with police, disaster response, or smart city partners
- Provide end-to-end kits with dashboard interface and live telemetry
- File for patent/IP protection on drone architecture and AI-FPGA interface
- Register product and SHAKTI-FPGA firmware stack for licensing or OEM interest

Phase 3: Manufacturing Readiness & Partnerships (4–6 Months)

Timeline: Mid-November to End-December 2025

- Use PoC milestone to secure venture/seed funding for limited-scale manufacturing
- Partner with local drone frame fabricators, electronics vendors, and assembly units
- Initiate talks with ideaForge, Garuda Aerospace, or DRDO labs for OEM collaboration
- Prepare technical documentation and training support for final demonstration (20th April 2026)

Final Goal: A Scalable, Secure, and Socially-Driven Product

By following this roadmap, we aim to deliver a **commercial-grade drone platform** that empowers authorities with a **reliable, intelligent, and fully indigenous tool** for crowd safety. This innovation has direct application in India's national mission for **tech-driven disaster preparedness and smart governance**, while also opening avenues for **export and defense deployment**.

2) **Timelines and Milestones**

In the first 2 months (July to mid-September 2025), our focus will be on final integration and indoor testing of the drone prototype. This includes full hardware assembly using the SHAKTI Yamuna SoC, sensor calibration, and AI module deployment for object tracking and surveillance.

By mid-September to November 2025, we plan to conduct pilot deployments with at least two government partners—such as smart city agencies, disaster response teams, or police departments. These trials will help us validate the performance of the drone in real-world surveillance scenarios and finalize the telemetry and dashboard interfaces.

By December 2025, we aim to achieve a Proof of Concept (PoC) demonstration with a fully functional field-tested drone. At this stage, we will complete core documentation (hardware manual, FPGA-IP licensing, SHAKTI stack) and submit our hardware prototype for the final demo scheduled on 20th April 2026.

This 6-month execution plan ensures a rapid, validated, and scalable path toward commercialization while aligning perfectly with the Grand Challenge's seed funding, milestone reviews, and final evaluation phases.

3) Unique Selling Proposition

1. **First-of-its-Kind Edge-AI Drone for Crowd Safety in India**
   Unlike conventional surveillance systems or generic drones, our solution combines **real-time AI processing, indigenous hardware (SHAKTI SoC)**, and **autonomous flight**, tailored specifically for mass crowd monitoring.

2. **Atmanirbhar (Self-Reliant) Technology Stack**
   Built entirely on **open-source Indian RISC-V architecture**, the system ensures **zero licensing fees**, **data sovereignty**, and compliance with **Make-in-India** mandates—appealing to public agencies and defense. Entirely free from foreign processor IPs
3. **Scalable Across Multiple Sectors**
   Beyond religious events and festivals, the platform can be adapted for:
   Sports arenas
   Political rallies
   Public protests
   Disaster management zones

4. **Cost-Efficient and Modular Design**
   By offloading AI to the drone and using **low-power components (LoRa, TinyML)**, operational costs are reduced. The modular nature allows custom deployments per event size, making it viable for **subscription-based safety services**.

5. **Future-Ready for Smart Cities & Swarm Drones**
   The system supports **mesh networking and swarm intelligence**, enabling mass area coverage—making it a key candidate for **Smart City integration, tender-based urban deployments**, and **Disaster Early Warning Systems (DEWS)**.

6. **Data-Driven Revenue Models**
   Historical analytics, heatmaps, and crowd behavior logs offer potential for:
   Predictive analytics services
   Event risk profiling
   Premium insights for organizers and insurance

7. **Modular FPGA Implementation:** Easy to upgrade, scale, or customize for different industries

8. **Dual-core Task Isolation:** Dedicated AI and control paths ensure reliability and low latency

9. **Designed for Public Safety:** Tailored for high-impact environments like religious gatherings, protests, etc.

4)Market Comparison

While global players like **DJI** offer sophisticated surveillance drones, their systems are often restricted due to geopolitical concerns and lack real-time onboard AI. Indian competitors like ideaForge and Garuda Aerospace deliver strong performance, but **still rely on ARM-based closed-source systems** and offer limited reconfigurability.

In contrast, our innovation offers full-stack control, from hardware (FPGA + SHAKTI) to software (Verilog/IP + AI firmware). This allows for easy upgrades, deep customization, and better security assurance—especially important for defense, border surveillance, and public safety missions. With a target price of ₹1.5 to ₹2 lakh per unit, our system is also far more affordable than most alternatives currently available in the market.

Feature	Our Solution	Commercial Drones (DJI, etc.)	AI CCTV Systems
Processor Architecture	RISC-V SHAKTI (Open Source, Indian)	ARM-based (Foreign, Proprietary)	Cloud/Server based
AI Inference	Onboard, real-time (Edge)	None or external module required	Offloaded to cloud/server
Modularity & Customization	FPGA-based, reconfigurable	Fixed, limited customizability	Non-mobile, location-fixed
Panic Detection	Crowd-specific, stampede-focused	Not available	Possible but non-portable
Connectivity	LoRa-enabled, offline capable	WiFi-dependent	Internet/cloud dependent
Target Segment	Public safety, smart city, defense	General aerial photography	Facility surveillance

5. Challenges or Risk factors associated with the project and the proposed mitigation strategies

1. FPGA Resource Constraints

Challenge:
The Arty A7-100T FPGA has limited hardware resources (LUTs, BRAM, DSPs), which may restrict integration of dual-core SoC, CNN inference engine, and all necessary peripheral IPs.

Mitigation Strategies:

- Use an **8-bit quantized CNN model** with small input resolution (e.g., 64×64 grayscale) to reduce memory and logic use.
- **Stub or offload non-essential IPs** (e.g., remove debug UART in final build).
- Use **bare-metal implementation** instead of full OS where possible.
- Seek permission to **upgrade FPGA board or add AI accelerators** (e.g., HLS CNN blocks) if selected among top 30 teams.

2. Camera Interface and Image Processing

Challenge:
Integrating a parallel camera (e.g., OV7670) with the SHAKTI SoC on FPGA requires custom IP for image capture and buffering, which can consume significant logic resources.

Mitigation Strategies:

- Use **minimal resolution (e.g., 160×120 or 64×64)** to reduce memory load.
- Employ **single frame snapshot inference** instead of real-time video stream if timing exceeds threshold.
- Buffer one frame at a time using BRAM and perform sequential pixel reading.

6. Have you established the Link-up with any agency/ organization, other than the Team members, for joint- development of this innovative solution.

None.

7. Have you received any interest from the end user of this innovative solution

The need for real-time stampede detection and crowd safety solutions has generated strong interest among government agencies, especially for large-scale public events like the Kumbh Mela, where past incidents have resulted in significant casualties. Our innovation aligns directly with the objectives of disaster management authorities, smart city missions, and law enforcement agencies that seek proactive crowd monitoring tools.

8. Have you approached any other organisation/agency for financial support for the present activity?

We are in the process of establishing collaboration with the **Entrepreneurship Cell of our college**, aiming to secure initial funding and institutional support for implementing our proposed solution at the **Kumbh Mela in Nashik, 2027**. This collaboration will help us accelerate prototype development, conduct early field trials, and refine the product for large-scale deployment. The E-Cell is expected to support us with resources, networking, and potential industry connections for future scaling. At this stage, formal linkages are being developed to align our innovation with on-ground deployment goals.

9. Relevant References.

Sr. No.	Source Title & Publisher	URL	Information/Relevance to Business Perspective
1	Invest India, "Drone Market in India Report – 2023"	https://www.investindia.gov.in	Crucial for understanding the domestic market size, growth projections, and overall feasibility for drone businesses in India.
2	Ministry of Civil Aviation, "Digital Sky Guidelines – DGCA"	https://digitalsky.dgca.gov.in	Essential for regulatory compliance, licensing requirements, and assessing deployment readiness for drone operations in India.
3	Make in India, "Sector Brief: Drones," 2023	https://www.makeinindia.com/sector/drones	Provides insights into government incentives for manufacturing and commercialization, vital for a 'Make in India' aligned product.
4	Drone Industry Insights (DIIA), "Global Drone Market Outlook 2022–2030"	https://droneii.com/product/global-drone-market-report	Offers a broader global market context, competitive benchmarking, and strategic insights for international expansion or positioning.
5	DPIIT, "Startup India Seed Fund Scheme Guidelines"	https://seedfund.startupindia.gov.in	Directly relevant for funding strategy, understanding government support for startups, and planning MVP development.
6	NITI Aayog, "National Strategy for Artificial Intelligence #AIforAll," 2021	https://niti.gov.in/sites/default/files/2021-02/National Strategy-for-AI-Discussion-Paper.pdf	Provides the national policy framework for AI, crucial for strategic partnerships, ethical considerations, and long-term alignment of the AI-powered system.

ANNEXURE

Please provide short biodata of the individual team members and the mentor.

Team Members:

Name: Pratik Uttam Mhasawade
Role in Team: Team Leader- System Feasibility and Validation Analysis, FPGA Synthesis
Department & Year: TY- Electronics and Telecommunication with VLSI Honor
Institution: Vidya Pratishthan's Kamalnayan Bajaj Institute of Engineering and Technology, Baramati
Technical Skills:Artix 7 FPGA Board (Basys 3 Kit), Verilog, VHDL, Embedded C, Vivado, Digital System Design, SoC, CMOS Digital VLSI Design, Firmware Development and Debugging, AMBA(AXI,AHB,APB), UART, SPI, I2C Protocols, RISC-V,etc.
Contact Email:pratik.mhasawade.entc.2023@vpkbiet.org

Name: Aniket Appaso Saste
Role in Team: AI camera integrator
Department & Year:TY- Electronics and Telecommunication with VLSI Honor
Institution:Vidya Pratishthan's Kamalnayan Bajaj Institute of Engineering and Technology, Baramati
Technical Skills:YOLO, TensorFlow Lite, and Edge AI Frameworks, Camera Module Interfacing (CSI/USB), Real-Time Image Processing, AI Model Optimization and Deployment, MQTT/HTTP Communication Protocols
Contact Email:aniket.saste.entc.2023@vpkbiet.org

Name: Niraj Anil Dhamal
Role in Team: Drone Hardware Designer
Department & Year: TY- Electronics and Telecommunication with VLSI Honor
Institution:Vidya Pratishthan's Kamalnayan Bajaj Institute of Engineering and Technology, Baramati
Technical Skills: Drone Design and Architecture, CAD (Fusion 360/SolidWorks),Motor and Propeller Selection, ESC and Flight Controller Integration (Pixhawk, APM), Battery and Power Management Systems,Soldering and PCB Assembly, RF Communication (LoRa, 2.4GHz)
Contact Email:niraj.dhamal.entc.2023@vpkbiet.org

Name: Abhishek Prakash Tiwari
Role in Team: Feasibility and Validation- Project analyst
Department & Year: TY- Electronics and Telecommunication with VLSI Honor
Institution:Vidya Pratishthan's Kamalnayan Bajaj Institute of Engineering and Technology, Baramati

Technical Skills: RTOS, C, Verilog, Simulation Tools (MATLAB/Simulink, Proteus), Firmware Developement, Technical Documentation, Validation and Testing Strategies
Contact Email:abhishek.tiwari.entc.2023@vpkbiet.org

Name: Gaurav Arun Shinde
Role in Team: Business Research analyst
Department & Year: TY- Electronics and Telecommunication with VLSI Honor
Institution: Vidya Pratishthan's Kamalnayan Bajaj Institute of Engineering and Technology, Baramati
Technical Skills: Market Research and Competitor Analysis, Business Model Canvas and SWOT Analysis, Technical Report Writing, Data Visualization (MS Excel, Power BI), Cost Estimation and Budget Planning, Presentation and Communication Skills
Contact Email:gaurav.shinde.entc.2023@vpkbiet.org

Mentor Biodata:

Name: Dr. Rajveer K. Shastri
Designation: Professor
Department: Electronics and Telecommunication Engineering
Institution: Vidya Pratishthan's Kamalnayan Bajaj Institute of Engineering and Technology, Baramati
Area of Expertise: VLSI Design, Signal and Image processing
Experience: (Years): 22
Contact Email: rajveer.shastri@vpkbiet.org
Related Publications with faculties:

1. K. A. Muthappa, A. S. A. Nisha, R. Shastri et al., "Design of high-speed, low-power non-volatile master slave flip-flop (NVMSFF) for memory registers designs," *Applied Nanoscience*, vol. 13, pp. 5369–5378, 2023, doi: 10.1007/s13204-023-02814-5. (Scopus)

2. A. Tandon, R. Shastri et al., "Video streaming in ultra high definition (4K and 8K) on a portable device employing a Versatile Video Coding standard," *Optik*, vol. 271, 2022, doi: 10.1016/j.ijleo.2022.170164. (Scopus)

Projects implemented

1. *Design and simulation of edge detection of monochrome image using VHDL* as partial fulfillment of M.E. (EC) course.
2. Awarded with Summer Faculty Research Fellowship at CARE Department, IIT Delhi, under mentor Dr. Arunkumar on the topic entitled ***Transducer Measurements in Near Field.***
3. Worked as a Co-investigator of the research project funded by Pune University for *automatic counting of silkworm eggs in the sericulture industry*.

Publications from Students' Projects in VLSI Design:

1. R. Shastri et.al, “PYNQ Framework based Defect Detection Using Convolutional Neural Networks”, India Journal of Technical Education, vol 8, no 1, May 2025, ISSN No.: 0971-3034
2. R. Shastri et al., “Design and Implementation of Controller for Car Parking System using VHDL,” *International Journal of Advances in Engineering and Management (IJAEM)*, vol. 5, No. 7, pp. 150–157, July 2023, ISSN 2395-5252.
3. R. Shastri et al., “Design and Implementation of Vending Machine Controller using VHDL,” *IJAEM*, vol. 5, no. 6, pp. 314–318, June 2023, ISSN 2395-5252.
4. R. Shastri et al., “Traffic Light Control System Based on FPGA,” *IJAEM*, vol. 5, no. 6, pp. 828–832, June 2023, ISSN 2395-5252.
5. R. Shastri et al., “Automatic Bottle Filling Plant Controller using VHDL,” *IJAEM*, vol. 5, no. 7, pp. 76–85, July 2023, ISSN 2395-5252.